CONCERTO

8" C/C SINGLE-SIDED PULL

Product Code: L.31.113

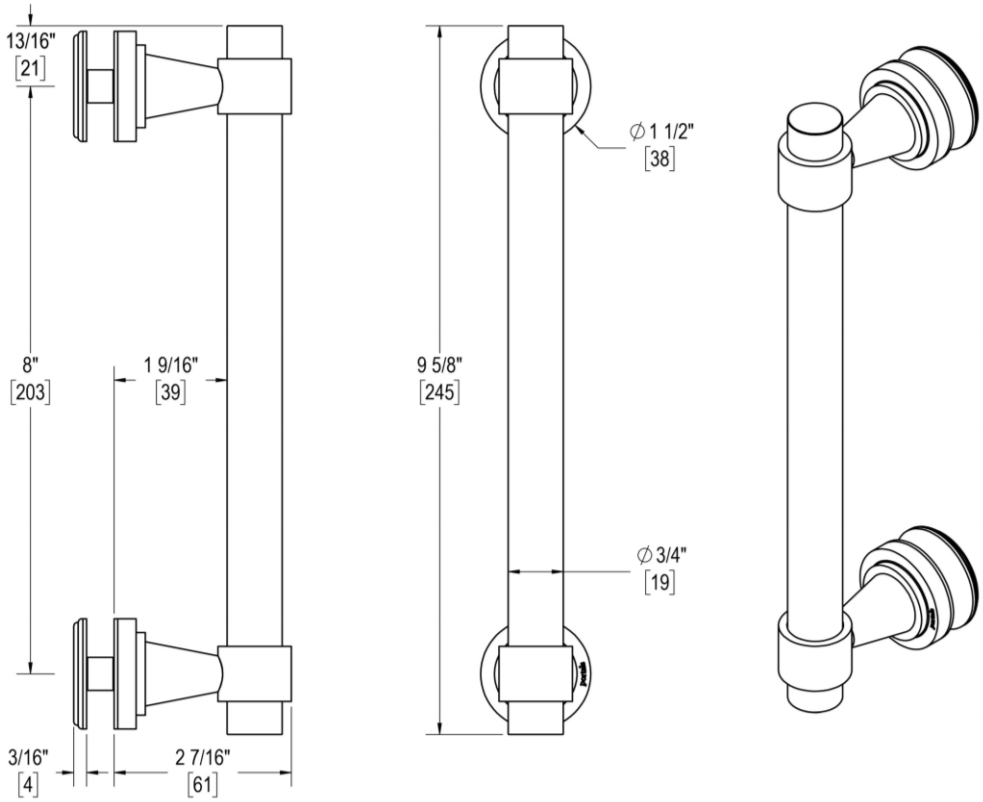

MATERIALS

Solid & tubular brass components, stainless steel fasteners, and clear polyurethane washers

FUNCTION DETAILS & PRODUCT NOTES

- Product design coordinates with other shower & bathroom hardware in the Concerto suite.
- Decorative rosettes provide additional design detail and cover any glass defects around the holes.
- Backplates for single-sided pulls are designed to allow clearance for bypass doors.

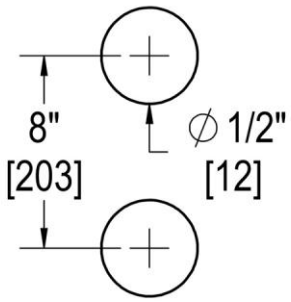

CARE & MAINTENANCE

Portals products should be cleaned with water and dried with a soft cloth. Use of harsh or abrasive chemicals may harm finish and will void the warranty.

WARRANTY

Lifetime warranty for residential use covers defects in material and workmanship of this product.

TEMPLATE & INSTALLATION NOTES

Item requires glass fabrication according to template above and should only be used with tempered safety glass.

Glass Thickness	1/4" [6 mm] to 1/2" [12 mm]
Hole Diameter	1/2" [12 mm]

Bohle | Portals • 925 Lydia Ave, Kansas City, MO 64106
ph: 888-838-6006 • support@portalshardware.com • portalshardware.com